OPTO ENGINEERING
THE TELECENTRIC COMPANY

LT CL 56

Collimated Illuminator

part number		LT CL 56/X
Beam Diameter	(mm)	70,0
Available Colours		
/R (red)		x
/G (green)		x
/B (blue)		x
/W (white)		x
/IR890 (IR, peak 890 nm)		x
/IR890 (IR, peak 940 nm)		x
Length	(mm)	197,3
Outer Diameter	(mm)	80,0
Compatible Telecentric Lenses	TC 13	n.a.
	TC 12	56
	TC 23	56
	TC 4M	56
	TC 2M	56
	TC16M	56
DEVICE POWER RATINGS		
DC Voltage	(volt)	12 to 24
Power Consumption	(watt)	< 2 watt
LED DIRECT DRIVE RATINGS		
for /W, /B and /G versions		
Max Forward DC Voltage	(volt)	3,5
Max Forward Current	(mA)	350
for /R version		
Max Forward DC Voltage	(volt)	2,5
Max Forward Current	(mA)	350
for /IR890 and /IR940 versions		
Max Forward DC Voltage	(volt)	1,6
Max Forward Current	(mA)	500 mA

Mechanical drawings:
see next page >>

Rev No.	Description	Date	Name
D	First Sight	27/02/07	A. Bnà

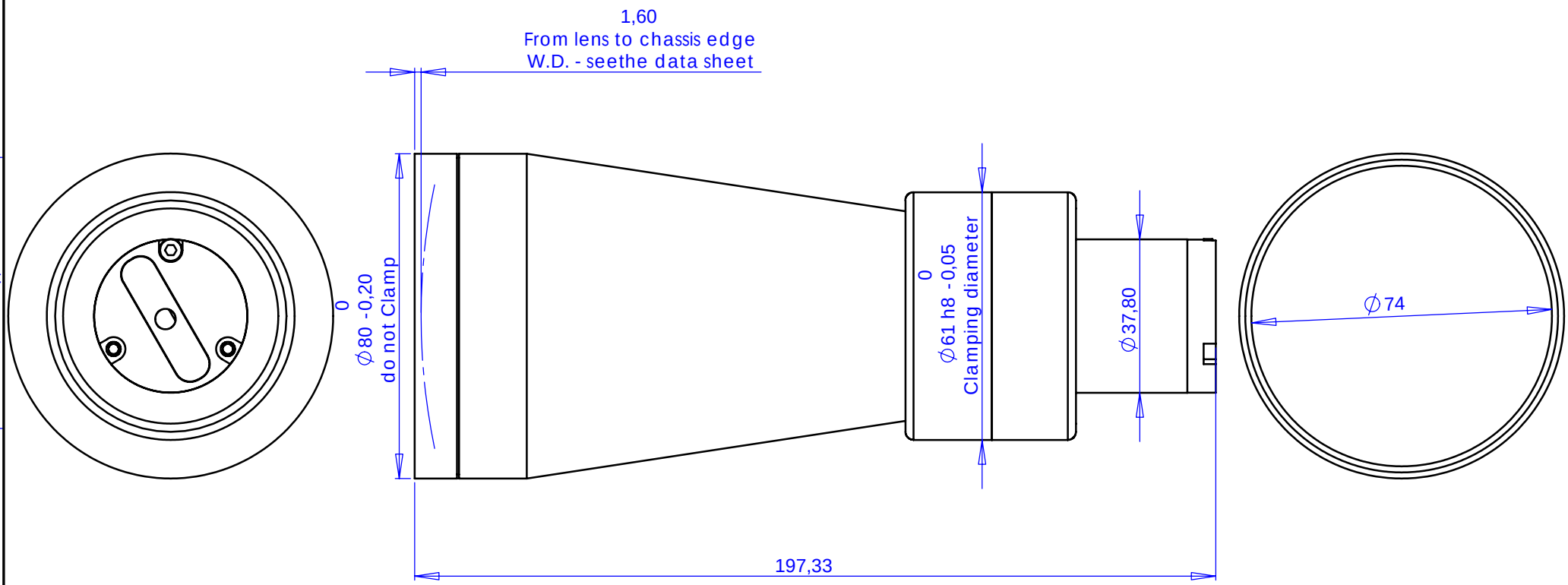

Material	N.A.	Mass	Scale 2:1
Surface treatment	N.A.	Project-Prod.item/Instrument	LT CL 56
Geometrical tolerance (ISO 2768-2) Class K	Undimensioned bevels 1x45°	Description	Assembly
Linear tolerance (ISO 2768-2) Class m	Undimensioned radii R 0.5		

Linear tolerance (ISO 2768-2)	0.5 ÷3	>3÷ 6	>6÷ 30	>30÷ 120	>120 ÷400	>400÷ 1000	>1000 ÷2000	>2000 ÷4000
	±0.1	±0.1	±0.2	±0.3	±0.5	±0.8	±1.2	±2

	Date	Name
Designed	27/02/07	A. Bnà
Draw	27/02/07	A. Bnà
Checked	X	C. Sedazzari

www.opto-engineering.com

Drawing No. 13669-0-D-LTCL56 | Sheet 1/1

Reproduction forbidden without specific authorization

OPTO ENGINEERING S.r.l. - 46100 Mantova Italy - Via Cremona, 28 - Tel/fax +39 0376 229585 - e-mai: info@opto-enginering.it - http://www.opto-engineering.com